GIBBSCAM | 2027 CAM for Production Machining

Version 2027 : September 2026

Radial Milling (4-Axis)

GIBBSCAM

Contents

Introduction To Radial Milling 4

About Radial Milling 4

Radial Milling Compared to Polar & Cylindrical Milling 4

Terminology 6

Models 8

What is 4-Axis? What is Radial Milling? 9

Geometry 9

Solids 9

Toolpath 10

Radial Milling Use And Interface 11

A Note About the Radial Milling Interface 11

Machining Icons 11

Radial Contouring 12

Geometry for Contouring 13

Contouring Example 13

The Radial Contour Process Dialog 15

General Data 15

Approach/Retract 16

Lead In/Out 18

Toolpath 20

Constraint Surfaces 25

Pocket Containment 25

Curve 26

Depth 26

Tool Shift 27

Segmentation 29

Gouging with Radial Milling 29

Radial Pocketing 32

Approach/Retract 32

Spindle Feed 33

Cutting 33

Toolpath 34

Segmentation 34

Custom Lead In/Out 34

Appendix 36
Helpful Formulas 36
Calculating Rotary Angles 36
Glossary 37
Conventions 39
Text 39
Graphics 39
Links To Online Resources 40
Index 41

Introduction To Radial Milling

- About Radial Milling
- “Models” on page 8
- “Toolpath” on page 10

Note: The capabilities and user interface described in this and other guides apply to GibbsCAM Industrial Edition with all product options licensed and active. GibbsCAM Viewer, GibbsCAM Operator and GibbsCAM Student Edition provide a subset of the full functionality.

About Radial Milling

The Radial Milling module provides simultaneous 4-axis machining of 3D geometry including support for Y-axis offsets. The Y-axis offset feature signifies the difference between Radial Milling and the Polar & Cylindrical Milling module, which requires that the centerline of the tool passes through the center of the part. The Radial Milling module is compatible with the Mill, Polar & Cylindrical Milling, Mill/Turn, Advanced CS, and MTM modules.
If you will be working from solid models, the Solids Import module is required for importing and extracting geometry to be cut. If you have either the 2.5D Solids or SolidSurfacer module, the Radial Milling module offers additional functionality: These solids-based modules allow you to select faces and geometry for controlling the tool axis.

> ⓘ Please note that Radial Milling does not directly machine solids. Solids are used for extracting geometry and in some cases controlling the tool axis. Radial Milling does not provide gouge protection on solids.

Before continuing with this guide, you should be familiar with, at a minimum, the Milling module. If you will be using solids, also become familiar with the 2.5D Solids or SolidSurfacer module. This guide does not provide a review of how to use other GibbsCAM modules.
The Radial Milling module is activated with two DLLs (located in the ...`\Plugins\4-Axis\` folder) and a hardware key or NLO license that has been configured for this feature. To support Radial Milling output, your post processor must be upgraded. Please contact your Reseller about upgrading post processors.

Radial Milling Compared to Polar & Cylindrical Milling

You can use Polar & Cylindrical Milling or Radial Milling modules to program 4-axis milling. However, the modules are very different in their capabilities, the parts they can program, and the G-code they produce. The choice of which option to use is driven by the type of parts to be machined and how those parts are defined.

Function	Polar & Cylindrical Milling	Radial Milling
What it does	Programs tool motion from “flat” geometry that is to be wrapped around a cylinder.	Programs tool motion from 3D geometry, as can be produced from solid models.
Sources for Parts	Includes CAD features to create geometry either as flat or wrapped. It can import flat geometry through IGES, DXF, etc. It can convert 3D geometry into flat/wrapped or vice-versa, but is not well suited to this and is limited to a single 360 degree piece of geometry. As a result, Polar & Cylindrical Milling is a cumbersome tool for working on solid models or 3D geometry defined parts.	Can work from any imported solid, surfaces, or 3D wireframe geometry. It does not work with “flat” geometry. As such the modify, wrap and unwrap tools are available for wrapping geometry.
Depth and Tapers	Works well with constant depth milling, but not with tapered floors.	Works best with constant depth milling and also has a variety of tapered floor capabilities.
Wall Angles and Y Offsets	Works well with parts dimensioned with axial lengths and degrees of revolution. The tool is always a radial tool; there is no Y offset in the toolpath, restricting wall angle options.	Supports a variety of part wall angle orientations and Y offsets.
Y-Axis Compatibility	Works well with machines that do not have a Y-Axis, like some Mill-Turns and MTM machines.	Works well with Y-Axis machines and does *not* work well with machines that do not have a Y-Axis.
Types of Parts	Works very well with parts defined with flat geometry, like roller dies, or tool centerline grooves. It has Face and OD milling capabilities for Mill/Turns and MTMs.	The core technology is shared with ProAXYZ 5as, making it a 5-axis system at heart. While it gains a lot of capability from this, it is not optimized for the special cases where single-block multi-revolution output is created.
Post Compatibility	Requires a post processor that supports Polar & Cylindrical Milling, which can be combined with 3-axis Mill, Mill-Turns, and MTM, but cannot be combined with an Advanced CS post (5-axis positioning) or a TMS post.	Any GibbsCAM post can be upgraded for Radial Milling compatibility (or even ProAXYZ 5as). Although Radial Milling can be combined into a TMS post processor, you cannot program TMS operations and Radial Milling operations in the same part. You may do one or the other only.
Interpolation Options	Supports CNC Polar and Cylindrical Interpolation output options.	Does not support Polar and Cylindrical Interpolation output.
Multi-revolution	Polar & Cylindrical Milling produces	Radial Milling does not produce single

Function	Polar & Cylindrical Milling	Radial Milling
Output	very optimal multi-revolution G-code output, creating unlimited revolutions on a single G-code line.	line or single block multi-revolution output.

Terminology

The Radial Milling module (formerly called the "4-Axis" module) introduces a number of new concepts to the GibbsCAM product line. While some of these concepts may be known to you, it is recommended that you read through the definitions to ensure you understand how they are used with Radial Milling.

Prismatic Shape

A *prismatic* shape (surface or solid) is a 2D profile extruded along a depth axis. For example, the shape might be 2D in XY, and extruded in Z. A 2-axis mill part is a combination of prismatic shapes.

Swept Surface or Swept Solid

A *swept* surface or solid is a 3D shape that is created if a profile is moved around a closed shape. If the profile is a line, the 3D shape is equivalent to a ruled surface. If the closed shape is 2D in XY and the line is parallel to Z, then a prismatic solid has been created.

Ruled Surface or Ruled Solid

A *ruled* surface or solid is created by moving a line around a closed shape while keeping the other end of the line on a second shape. A ruled shape is a prismatic shape if the two HV shapes are identical, only offset in D. This causes the ruling line to always be parallel to D.

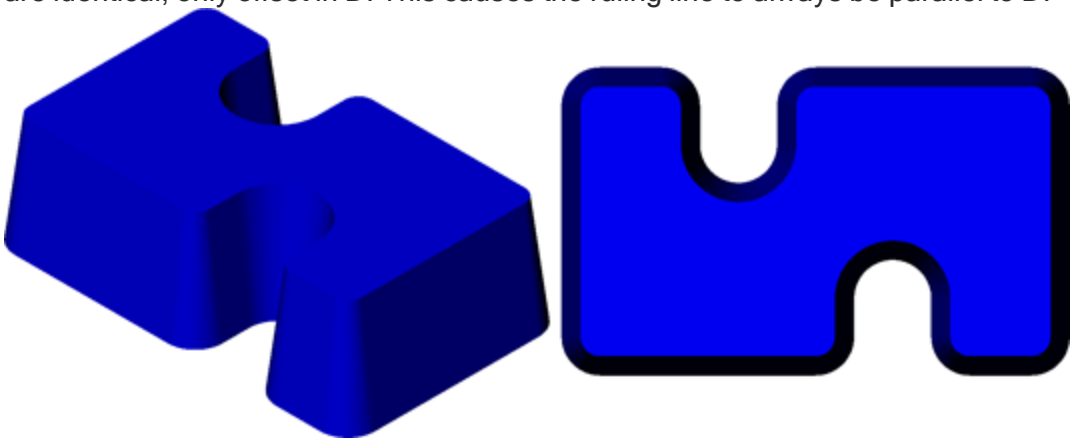

Radial

Radial refers to anything defined in relation to an axis of rotation.

Radial depth

The radial depth is the distance from the axis of rotation.

Radial line

A radial line is a line that passes through and is perpendicular to an axis of rotation.

Radial Shape or Radial Profile

A radial shape is a shape which lies on a cylinder around the axis of rotation. This is the radial equivalent to a 2D shape or profile.

Radial surface

A radial surface is a swept surface where the profile is a radial line. Typically the radial line sweeps around a radial shape. A radial surface is also any ruled surface where all the rule lines

are radial lines.

Radially Prismatic

This is the radial equivalent to a prismatic shape.

Solids have walls and floors. A radially prismatic solid has walls that are radial surfaces and floors that are cylinders, all from the same axis of rotation. Walls can be machined with the side of the tool, floors can be machined with the bottom of the tool.

The big difference between 2-axis and 3-axis milling is that in 2-axis milling the walls are finished with the side of the tool and the floors are finished with the bottom of the tool, whereas 3-axis milling cuts everything with the tangent point of tool contact. This same difference exists between radially prismatic rotary milling (the walls are finished with the side of the tool and floors with the bottom of the tool) and freeform rotary milling where everything is cut with the tangent contact point of the tool.

Freeform

Freeform refers to a solid of any shape. Rotary machining on a freeform shape is performed with many passes, cutting with the tool's tangent point of contact.

Developable Surface

A developable surface is a surface that can be cut exactly with the side of a tool (a cutting cylindrical shape). A developable surface is a ruled surface with constant normal vectors along all ruled surfaces. Developable surfaces have parallel surface normal vectors along a surface line (not curve) of tool cylinder contact. Prismatic surfaces are developable surfaces. Most radial surfaces, ruled surfaces and swept surfaces are not developable surfaces. The safe way to cut non-developable surfaces is by using 3-axis or freeform rotary methods which is slow and expensive. If a surface is not developable there will be tool overcuts and undercuts that often can be “good enough” or within tolerance.

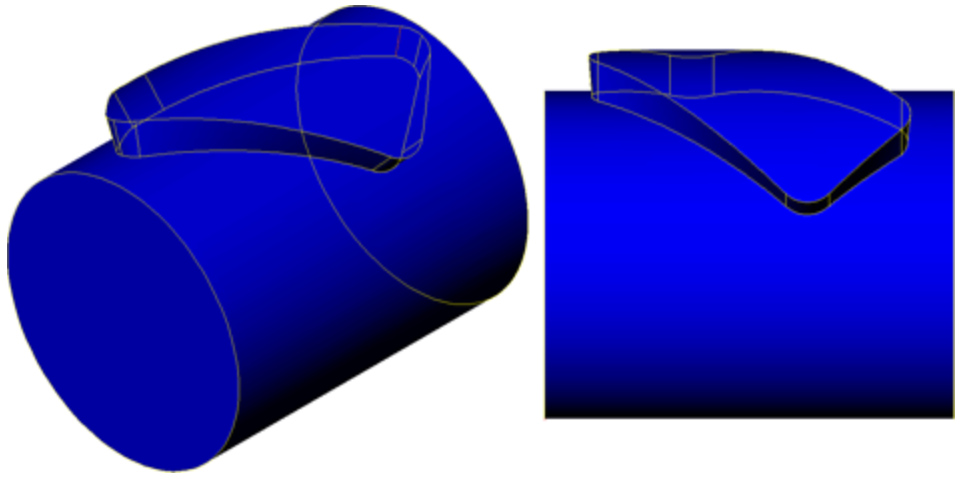

A solid with a boss that is developable

Many parts look like they can be cut on a rotary table with the side of a tool in a single pass. But can they really be cut that way? Cut exactly that way? Frequently not. Usually the material can be cut close enough or “within tolerance” to make a good part.

Further complicating the issue of cutting parts is the fact that CAD software and engineers frequently do not understand the geometric relationships of tool-to-part in milling that includes rotary movement. Software and engineers often are not very careful about how they model non-critical areas of the part. This can result in a model that cannot be machined with radially prismatic 4-axis methods. As a result, most 4-axis radial milling is not about exactly machining a solid model. Most 4-axis machining is about understanding what customers truly want in their

parts – for example, which areas are critical, and which are not – and using good manufacturing judgment to apply 4-axis cutting methods to the part in a practical and efficient way.
The good news is that Radial Milling has been designed to give you the freedom to apply the cutting methods you choose to the model in the way you choose. Radial Milling does not force you to be controlled by a poorly constructed solid model.

Transitional Element

A transitional element can be thought of as a patch between two surfaces, such as a fillet. Transitional elements, when modeled, are rarely developable surfaces. Typically when a fillet is added, the modeler does not specify a cone between two planes but rather a swept surface that is only defined along one side – usually the radius at the top.

Tool Interaction

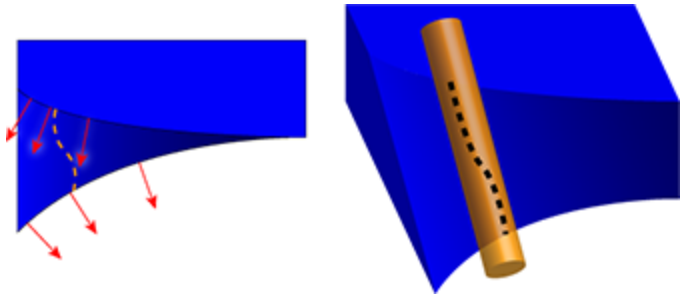

A tool (a cylindrical shape) generally cannot cut a ruled surface. The tool will attempt to follow the curves of the surface, following the surface normals. The surface normals on a ruled surface can point in very different directions. The resulting point of contact is not a straight line. Different sections of the tool will be gouging or leaving excess material on the surface, resulting in an imperfect surface. The amount of the error is proportional to the size of the tool and how far the normals are from each other.

Part-centric

GibbsCAM regards parts in a *part-centric* way – that is, from the point of view of the part. This means we think and talk about the part as if it is stationary and tools move around it. We do not think about machine motion. We think of cutting the way it is shown in CPR, so we say the tool is moving around the part, even though on a rotary table machine the part would be rotating.

4-axis Surface

A 4-axis surface is a surface that can be cut “well enough” with a 4-axis machine.

Radial Milling

The GibbsCAM module for machining 4-axis radially prismatic parts. Formerly known as the "4-Axis" module.

ProAXYZ 5as

The ProAXYZ module for machining 5-axis freeform parts.

Polar & Cylindrical Milling

The GibbsCAM product option for 4-axis milling of wrapped geometry. Formerly known as "Rotary Milling".

Models

What is 4-Axis? What is Radial Milling?

It is important to learn to differentiate between parts that can and cannot be cut on a 4-axis machine. Generally, in a Radial Milling part, the lines that are perpendicular to the rotary axis (parallel to the Y-Axis) must be overlapping when looking straight down on them. The following image is a valid Radial Milling part. The shape is fairly simple, but it can be cut with Radial Milling. The walls of the boss overlap each other. The angle of the boss may look strange, since it is not radial, but it can be cut with a 4-axis machine. The walls along Y are radial, and the tool angle can be changed to get into the corner.

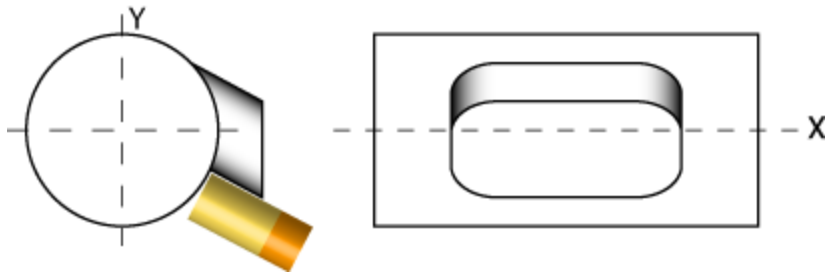

Example of a valid Radial Milling part that may not appear to be machinable

Geometry

The Radial Milling module uses selected geometry to control the cut shape and direction. If you have a solid model, simply extract the geometry you wish to machine. The geometry to be machined should be *radially prismatic* – in other words, radial around an axis. Radially prismatic shapes can be finished with the bottom or side of a tool with lines and arcs. If a shape is not radially prismatic, or if it needs to be finished with a tangent point of the tool, it will have many little moves and will probably need to be cut on a 5-axis machine.
You should be aware of potential problems when cutting 4-axis parts, whether they originate from a blueprint, 2D geometry, or solids. Because of ruled surfaces, transitional features, fillet modeling, and the interaction between tool and part, a model will often have a feature that cannot physically be cut as designed. In these cases, a machinist must determine if it is “good enough” – that is, within tolerance or satisfactory to the client’s needs.

Solids

The Radial Milling product module supports solids and provides additional functionality when creating operations using solids. However, solids can present interesting difficulties, depending on how they were modeled. What may appear to be a 4-axis radially prismatic part on a blueprint might have been modeled such that it is not, particularly when dealing with *transitional elements*. All information regarding ruled surfaces, developable surfaces, transitional elements, and tool interaction still applies when using solids.
What the solids modules provide to Radial Milling is the ability to extract geometry and, more importantly, face selection for controlling where the tool will go by controlling the tool axis. Of

course if the surface is ruled, the system will do its best to keep the output “good enough” based on your needs and input.

Toolpath

Radial Milling produces two types of operations: Pocketing, and Contouring. Pocketing clears an area with radial walls. Contouring follows selected geometry, cutting with either the bottom of the tool or the side of the tool. All clearance moves, entry/exit moves, and cutting moves are defined and controlled by the Radial Milling module.
At this time Radial Milling is not capable of performing ID machining. This is an improvement for the future.

Radial Milling Use and Interface

- A Note About the Radial Milling Interface
- “Machining Icons” on page 11
- “ Radial Contouring” on page 12
- “ Radial Pocketing” on page 32

A Note About the Radial Milling Interface

The Radial Milling module was developed as a GibbsCAM plug-in. Plug-ins are closely integrated into GibbsCAM, but often have minor differences in how they work. For example, the Radial Milling dialogs are modal – in other words, you cannot change selections while they are up. Plug-ins do not use start point and end point markers. Plug-ins do not support transparency and other window and interface options.

Machining Icons

The Radial Milling option adds two icons to the machining selection, one for Radial Milling Contouring and one for Radial Milling Pocketing.

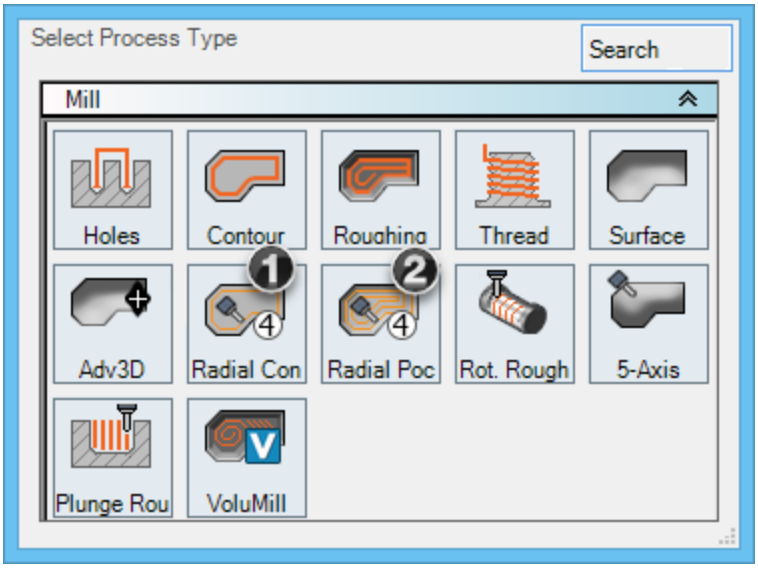

1. Contouring
2. Pocketing

Unlike other machining processes, it is recommended that you select the geometry (a point and line or arc) to be machined before creating the process. This allows the process to properly set geometry data (for more information, see “Curve” on page 26). Beyond this, creating a Radial Millings process is identical to any other machining process: You simply double-click a Process tile, select the Radial Contouring or Pocketing icon from the dialog and choose a tool. This opens a dialog where you set the parameters of the operation.

Radial Contouring

Radial contouring has two basic objectives: to control the path of the tool motion, and to control the tool angle (the tilt) of the tool as it follows this path.
To give the user control over the path of the tool motion, contouring requires a geometry path as input. Contouring calculates a sequence of tool movements based on a concept of a “controlling point”, which is a point that follows the geometric path from the start of the cut to the end of the cut. By default, contouring will position the tip of the tool on this controlling point throughout the cut. A number of user-specified parameters can cause the tool position to vary from this controlling point as the tool travels along the path. The tool can be shifted up or down, left or right from the controlling point. Any variance in the tool position is calculated from the original path, and based on the traveling controlling point.
Similar to the “controlling point” concept, contouring also has a way to control the tool angle, or tilt, of the tool as it cuts. A “controlling line” is calculated at every position of the tool as it travels along the path. The controlling line is a “radial line”, meaning that it is a line that goes through the center of rotation of the machine’s rotary axis and also through the controlling point. Additionally, this line is always perpendicular to the machine’s rotary axis. By default, the tool angle, or tilt, is set precisely parallel to this controlling line. A number of user-specified parameters can cause the tool tilt angle to vary from the controlling line, including the ability to use solid faces. The tool can lean forward or backward, left or right, from the controlling line. Any variance in the tool tilt angle is calculated from this traveling controlling line.

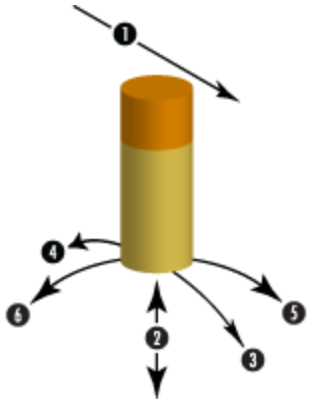

1. Direction
2. Tool Axis
3. Lead
4. Lag
5. Left
6. Right

Tool Axis Control

Additionally, it may be useful to consider a plane that goes through the controlling point, and is normal, or perpendicular to, the controlling line. This plane can be calculated at each position of the controlling point, as the controlling point travels along the geometrical path of the cut. Any left or right tool shift from the controlling point, is calculated in this plane. And any up or down tool shift from the controlling point, is calculated normal to this plane.

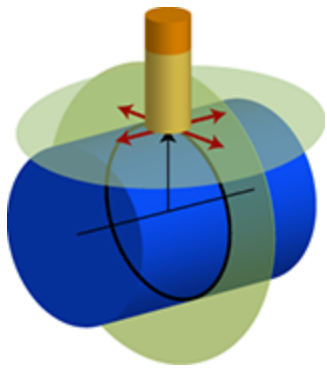

Geometry for Contouring

The geometry used for contouring operations should not have sharp corners. Internal corners (viewed in the cylinder tangent plane) should be larger than the Perp Cut/Dir value by more than a little. External corners do not need a radius. The Tolerance value used should be smaller than the radius used. You may need to add fillets to a model before extracting your geometry, or select smaller tools.

Contouring Example

This example uses a vertical mill 4-axis rotating A about X. This discussion considers a simple shape: a YZ plane circle centered on the rotary axis at Y0 Z0.

Example 1

We have a 50mm diameter shaft and we need to cut a 6mm deep 13mm wide groove all the way around. There is a 38mm diameter circle geometry in the center floor of the groove. A 13mm tool will be used to cut the groove. The geometry is selected and an operation is created with all options unchecked. The tool will cut the groove, and stay radial itself – centerline through rotary axis, 0 Y offset.

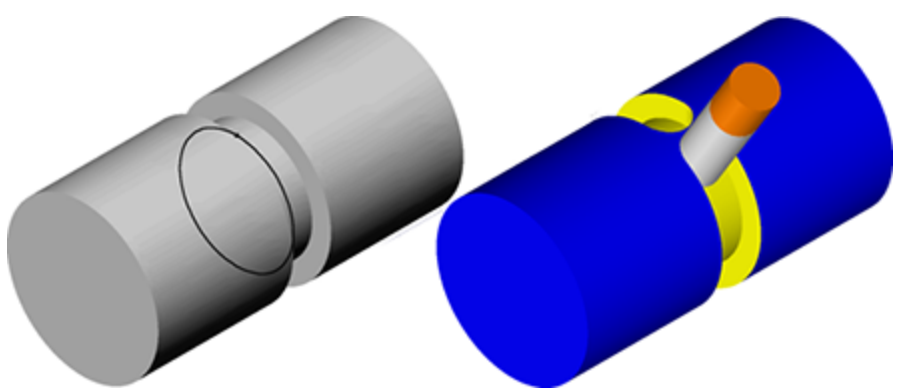

Example of geometry in the center of a groove and the rendered operation

Example 2

The circle is not on the centerline of the groove floor, but rather on one floor edge. This time we specify a Tool Shift - Perp/Cut Dir (the same as a tool offset) of 6.5mm and cut along the side of the geometry.

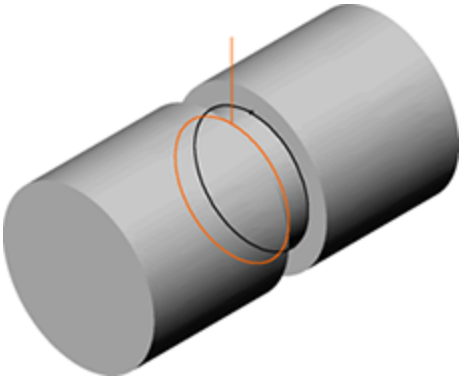

The tool orientation matches the radial angle through the prime point on the geometry as it moves around.

Example 3

This time the circle is on the side of the groove at the OD. Example 2 is duplicated and a Depth - Constant value of -6.5 from the geometry is specified.

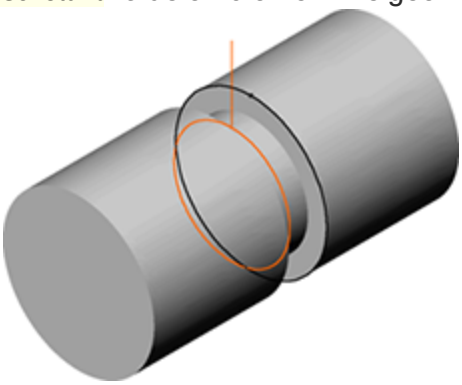

Process Summary

YZ circles are quite simple but everything works off the same principle. Create your geometry. Pick your start feature and start point. Decide if you want the tool to follow the geometry Z exactly, or use a Depth choice. Decide if you want the tool on center of the geometry in the tangent cylinder plane, or shifted to the side with a Tool Shift - Perp/Cut Dir value.
When cutting a wall, you will frequently have a tool radius value in the Perp/Cut Dir box. Plus values offset to the left, minus values offset to the right. Even though the tool may move to one side, or up and down under Depth options, its radial alignment will be determined from a radial line through the prime point, at every position on the geometry. This will produce Y offsets in the toolpath and radial surfaces on the part. This is a good choice for many parts.

The Radial Contour Process Dialog

The Radial Contour Parameters dialog opens when a radial contour process and tool are selected. This dialog allows you to define how a 4-axis contour will follow 3D geometry. Set the process parameters and click the OK button to set the process parameters and close the dialog. If you have not selected the geometry to machine, select a point and a line or curve (and perhaps faces of a solid) and then click Do It in the Machining palette. Click the Cancel button to close the dialog without making any changes.

General Data

Tolerance

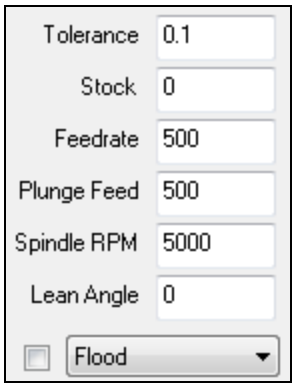

This option allows you to set the accuracy of the toolpath along the selected geometry. This value is in part units.

Stock

Specify the thickness of material to be left on the part. The side of the material that stock is left on is defined by the Approach Side option and will be measured from the Left or Right based on the Approach Side setting. This value is in part units.

Feedrate

Specify the cutting feedrate in millimeters per minute or inches per minute.

Spindle RPM

Specify the rotation speed of the spindle in revolutions per minute.

Lean Angle

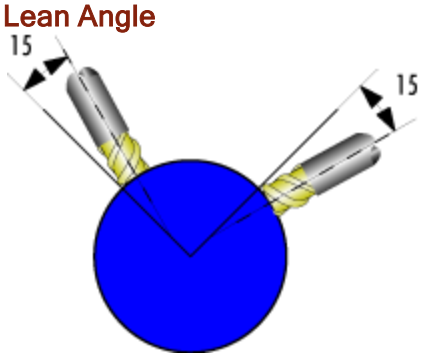

Using a Lean Angle value, you can cause the tool to be set to a particular angle in addition to the default radial angle. This is useful for cutting at a constant angle, such as an angled wall on a screw. The Toolpath option Progressive Lean Angle can be used to move the tool back and forth to make a chamfer on a pocket.

Coolant Checkbox

If you want to use coolant in this operation, select this checkbox and then choose the type of coolant to use.

Approach/Retract

The Approach/Retract values are basically the same as any GibbsCAM process with the addition of some data. All values entered here are in part units.

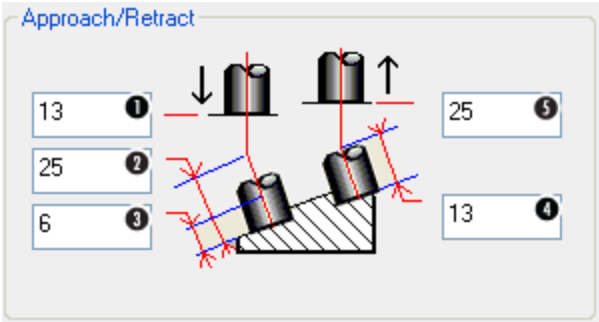

1. Entry Clearance Plane
2. Rapid Clearance
3. Feed Entry Clearance
4. Feed Exit Clearance
5. Exit Clearance Plane

Entry Clearance Plane

This value is not used by GibbsCAM.

Rapid Clearance

This value is an incremental distance measured up from the finish cut depth. The resulting Z-axis rapid approach move will always occur after the rotary axis has rotated to the correct starting angle. The rotary axis angle will be identical to the tool orientation at the first point of toolpath. The Z-axis approach move also occurs before any lead-in moves. This item is similar to a Mill Contour or Pocketing Clearance Plane 2. This clearance value could be considered CP2a.

Feed Entry Clearance

This value is an incremental distance measured up from the finish cut depth. The tool will rapid from the Rapid Clearance Z to the Z and will then feed to the cut depth. The rotary axis angle will be identical to the tool orientation at the first point of toolpath. The move occurs before the Lead-in move. This item is similar to a Mill Contour or Pocketing Clearance Plane 2. This clearance value could be considered CP2b.

Feed Exit Clearance

This value is an incremental distance measured up from the finish cut depth. The rotary axis angle will be identical to the tool orientation at the last point of toolpath. This move occurs after the Lead-out move. This item is similar to a Mill Contour or Pocketing Clearance Plane 3. This clearance value could be considered CP3b.

Exit Clearance Plane

This value specifies the clearance plane for the operation. This value is an absolute Z-value in the current CS (the machining CS). This item is similar to a Mill Contour or Pocketing Clearance Plane 3. This clearance value could be considered CP3a.

Illustrated Example of the Clearance Planes

This example shows a part and how the clearance values show up in a post. The top of this 4-axis part is at Z `2.5`. The depth of cut set in the process dialog is `0.5`, to a final depth of `2.0`. The Clearance Plane set in the Document Control dialog (CP1) is `10`. The process clearances are as shown here.

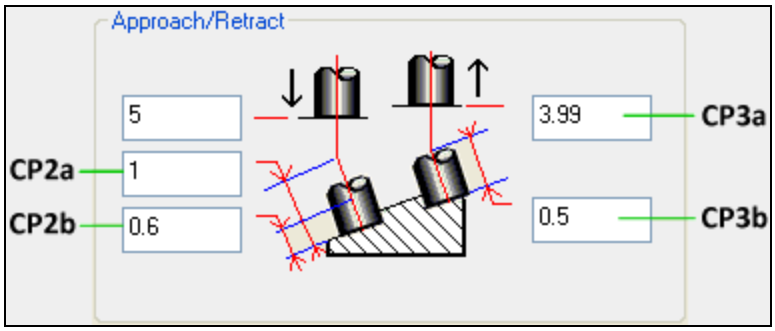

Below we can see the part (solid and geometry), the toolpath and the values of a few important points.

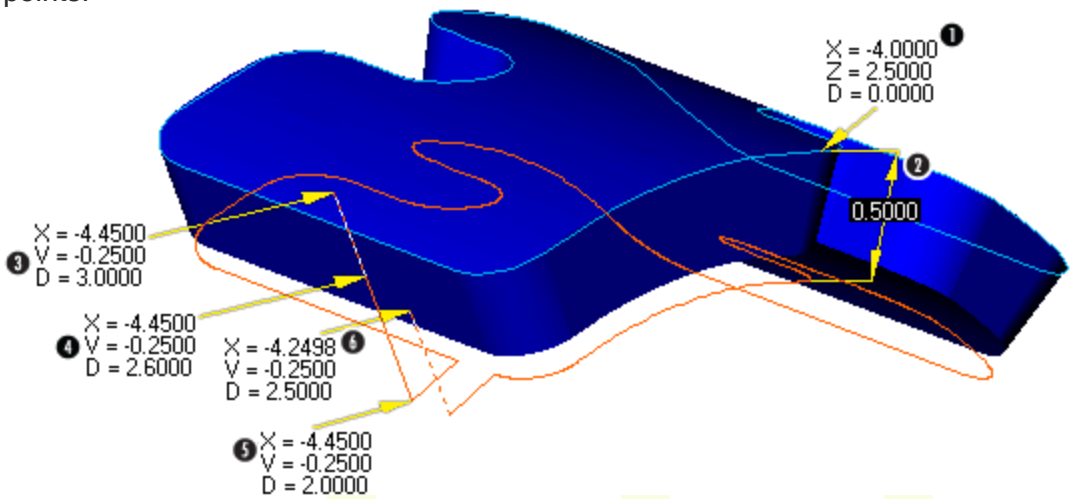

The top of the part is at Z `2.5` (#1). The tool cuts `0.5` (#2) past that to `2.0`. CP2a (#3) shows a depth value of `3`, which is `1` above the finish cut depth. CP2b (#4) shows a value of `2.6`, which is `0.6` above the finish cut depth. The cut depth is `2.0` (#5). CP3b (#6) shows a value of `2.5`, which is `0.5` above the finish cut depth.

Below is a sample of the posted code. Important values have been highlighted.

Entry Values	Exit Values
(TOOL 1 - .375 ROUGH ENDMILL)	N1292X-4.2498Y-.25
N5G0G90G54X-4.45Y-.25A37.8 *(start angle)*	N1293G0Z2.5 *(CP3b)*
N6S5000M3	N1294Z3.99 *(CP3a)*
N7G43Z10.H1 *(CP1 from DCD)*	N1295Z10.*(CP1 from DCD)*
N8M8	N1296M9
N9Z3. *(CP2a)*	N1297G91G30Z0.
N10X-4.45Y-.25Z3.	N1298G90A0. *(rotate back to straight)*
N11Z2.6 *(CP2b)*	N1299G91G30Y0.
N12G1Z2.F50. *(Cut Depth)*	N1300M30

Lead In/Out

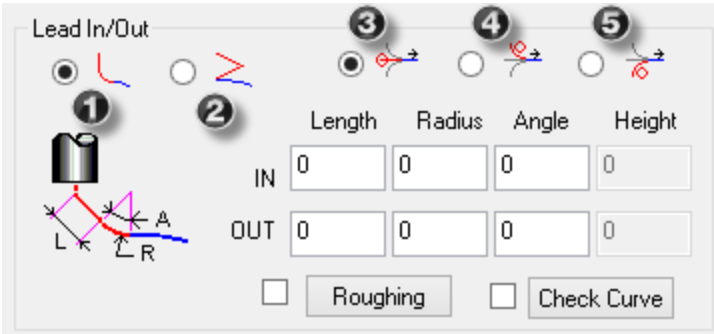

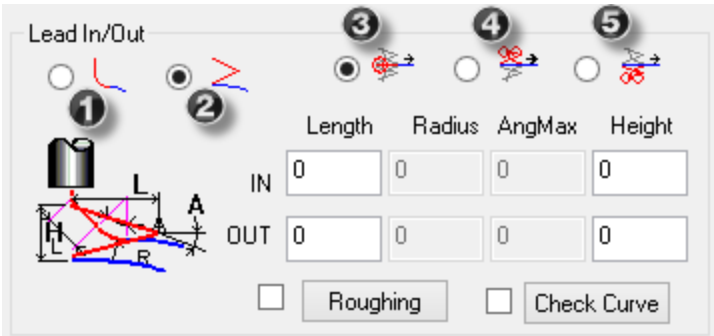

1. Tangent
2. Ramp
3. Center
4. Left
5. Right

Lead In/Out Mode

Tangent Entry

This option sets a tangent lead-in/out mode which is a linear move followed by a circular move. When this option is selected, the Length, Radius and Angle fields are enabled and the Height field is disabled

Ramp Entry

This option sets a Ramp entry. When this option is enabled the In Length, Height and Max Ramp Angle fields and the Out Height fields are enabled.

Approach Side

Center

Select this option to approach from on center. When used with Tangent Entry, the approach will move parallel to the first feature (in X, Y, or XY) and will simultaneously move in Z. The rotary axis angle will already be identical to the tool orientation at the first point of toolpath before the lead-in move begins. Also, the rotary axis will not rotate during the lead-in move– in other words, this is a 2 - 3-axis simultaneous lead-in move that does not use the rotary axis.
Alternatively, when used with Ramp Entry, the approach will ramp parallel to the first feature (in X, Y, or XY) and will simultaneously move in Z and also in the rotary axis. The rotary axis angle will be identical to the tool orientation at the first point of toolpath where the lead-in ramp ends– in other words, this is a 4-axis simultaneous lead-in move that uses the rotary axis.

Left

Select this option to approach from the left side of the shape. When used with the Tangent Entry, the approach will move parallel to the first feature (in X, Y or XY) and will not move in Z. The rotary axis angle will already be identical to the tool orientation at the first point of toolpath before the lead-in move begins. Also, the rotary axis will not rotate during the lead-in move– in other words, this is a 1 - 2-axis simultaneous lead-in move that does not use the rotary axis. Alternatively, when used with Ramp Entry, the approach will perform an XY-type zigzag while simultaneously rotating the rotary axis. The rotary axis angle will be identical to the tool orientation at the first point of toolpath where the lead-in zigzag ends– in other words, this is a 2 - 3-axis simultaneous lead-in move that uses the rotary axis.

Right

Select this option to approach from the right side of the shape. This option behaves like Left except that the lead-in moves are executed on the right side of the shape.

Roughing

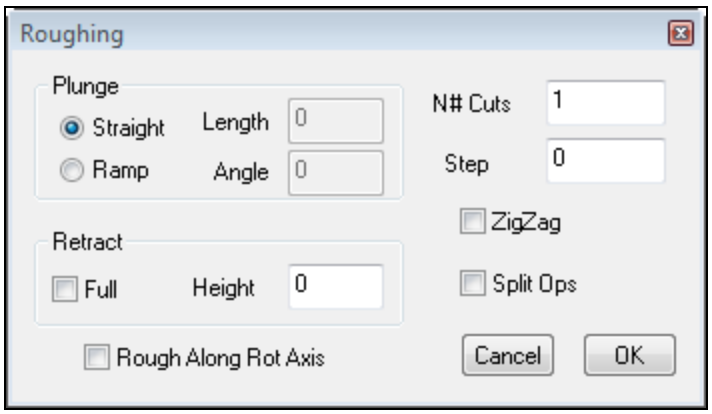

Select this option to define more than one pass along the contour. The entry behavior of the first pass is defined in the main part of the dialog but successive passes are defined in the Roughing dialog. Clicking the Roughing button opens a dialog where you can set the parameters.

Plunge

Select whether to plunge Straight into the material or to Ramp into the material. When Ramp is selected, the Length and Angle fields are available to define the ramp motion.

Retract

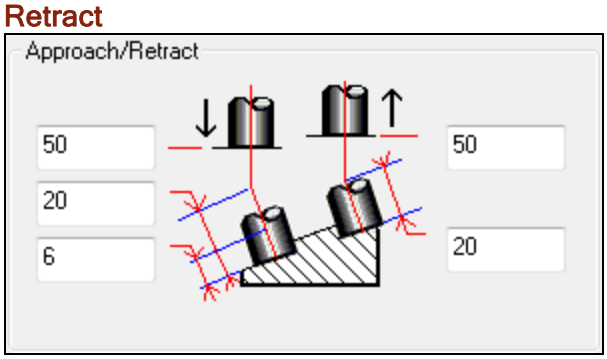

This section allows you to define the tool motion between successive cuts. Selecting Full will cause the tool to rapid to the operation's Exit Clearance Plane (see value highlighted in the image to the right).

The Retract option is inactive when using Zig Zag.

The Heightfield is an extra option that generates an incremental retract between roughing passes. If Full option is inactive, the tool retracts by the Height value, move to the start of the shape at the same height value and then plunge to the first point of the new cut. With a closed shape this value is typically 0.
Using the Full option can be useful if you have an open shape. If the open contour starts on a cylinder at -90 and you cut all the way to +90, any retract along the tool axis will still see the tool going across the part. If the Full option is used the tool will retract by the incremental value along the tool axis, then will move vertically (along the Z-axis of the CS) to go to the absolute ZCP3 value, move across the part staying at the ZCP3 value and then plunges back vertically (along the Z-axis of the CS).
It is recommended that the Split Ops option is used if a process will use multiple shapes. This will cause each disjoint shape to be its own operation. With machine-specific rotary head support built into some GibbsCAM MDDs you will have more precise control over the retract moves between operations. If you do not use Split Ops, you do not have any of these MDD-controlled clearance options available to help you control the moves, because the ops are not considered inter-operation moves.

Number of Cuts

Enter the total number of roughing passes to make.

Step

Enter the distance (step down) between each pass of the tool. This value is measured along the direction of the tool axis. This is typically the depth of cut divided by the number of cuts.

Zig Zag

Select this option to cause the tool to alternate its cutting direction between each pass.

Split Ops

This option can be used when there is more than 1 step taken to the final depth of the operation. Selecting this option will break the single operation into an operation for each pass. This is particularly useful when the start and end of each pass is not at the same angle. A retract from this condition might send the tool through the part. Since each pass is now a separate operation, a proper, safe retract can be generated.

Toolpath

The toolpath section controls tool behavior along geometry. You do not always have to keep your tool aligned parallel to a radial line through the prime point on the geometry. You do not have to cut radial walls. This section provides several options for other angles. There is a drop-down menu to modify the tool angle (or “tool direction”) relative to the default radial alignment, and a Lean parameter for adjustment. Use a maximum of one option, or you may use none if that suits your needs.

> The system allows for more than one selection at a time. This is useful in ProAXYZ 5as, but in Radial Milling only one option will work at a time.

Except for the Radial Tool option, the prime point on the geometry is the pivot point for tool orientation changes. If you have lowered the tool tip below the geometry, do not be surprised to see it swinging back and forth with angle changes, creating retrograde (moving backward) tip motion. This is not invalid, but it can be undesired. Wall thicknesses will be most accurate at the geometry level.

4th Axis

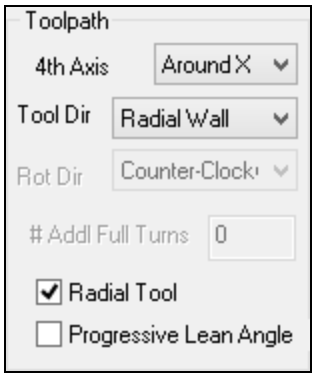

This pull-down menu lets you define how the 4th axis is controlled during the operation. The tool orientation is defined by a radial direction at the contact point on the selected shape. The rotary axis is defined by the selected axis. Options include Around X (or Y or Z) for CS1, and Around H (or V or D) for the current CS. Around X is typically used for vertical mills, and Around Y is typically used for horizontal mills.

Tool Direction

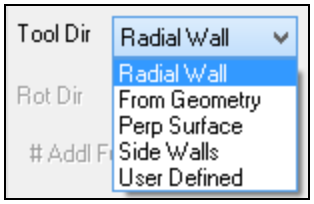

This pull-down menu lets you specify the item or method that determines the tool direction. Each choice (Radial Wall, From Geometry, Perp Surface, Side Walls, and User Defined) is discussed below.

Radial Wall

This was the default mode in previous versions. It is considered that we machine a radial wall passing through the selected shape. (The wall is radial, not the tool axis.)

From Geometry

Previously known as Tool Dir From Geometry, this option forces the tool orientation to be defined by the selected shape. This is intended for cutting cams with the bottom of the tool. Cams are non-circular. This choice keeps the tool normal to the geometry in the rotary axis normal plane. The prime point on the geometry is the pivot point which makes Depth shifts play a significant effect on tool motion. If the tool tip is on the geometry, with a Depth shift of `0.0`, then the tip will follow the geometry, and all angle changes occur above the tip (best results). If the geometry is above the tip and a Depth shift value is needed to lower the tip, you may get some tip swinging as the angles are pivoting at the geometry point level.

Perp Surface

In this option the tool is perpendicular to the selected surface. The surface normal is calculated on a point along the selected shape, so technically, the tool axis is not actually perpendicular to the surface, but it is considered that we machine a wall perpendicular to the surface. If the tool is shifted, or in the led-in/out portions of the path, the tool axis will probably not be perpendicular to the surface.

Side Walls

Previously known as the Side Cut option. This option is selected to cut the shape with the side of the tool rather than the bottom of the tool. This is useful when cutting the wall of a shape (not the floor or for solids). This option is typically used in conjunction with face selections on a solid model. This option causes Radial Milling to get the normal vector from

the selected face at the prime point on the geometry and calculate the appropriate 4-axis tilt at that point.

This works well with 4-axis surfaces, but can produce strange results from non-4-axis surfaces. In the example of A-axis rotation about X (for example, see "Contouring Example" on page 13), the circle examples produce a wall that is square to the rotary axis, with no X variation – they are straight up and down. Picture this same wall with a 5 degree draft angle or taper. This is no longer a 4-axis surface. The tool cannot tilt in the X direction, only the Y direction. A 4-axis machine cannot cut this. Side Cut will produce strange results if applied to these surfaces. Side Cut pivots at the geometry level.

User Defined

For CNC machines that support simultaneous linear and circular interpolation between vectors, Radial Milling creates one-line unsegmented helical toolpath where possible. The output G-Code combines linear and circular moves to create an unsegmented analytical helix rather than a series of segments. The result is greatly reduced segmentation (smoother toolpath), vastly simplified post output code, and increased overall throughput.

a. Select a start vector and then `CTRL-select` a parallel end vector.
b. Specify a Rotation Direction: Either Shortest Angle (to let the system decide), or else Clockwise or Counterclockwise.
c. Enter a whole-number value for # Additional Full Turns.
d. Click Do It to generate the analytical helical toolpath.

As the sample model shows, if the endpoints of the start and end vectors are not at the same distance from the axis, the helical toolpath will taper evenly within a conical envelope.

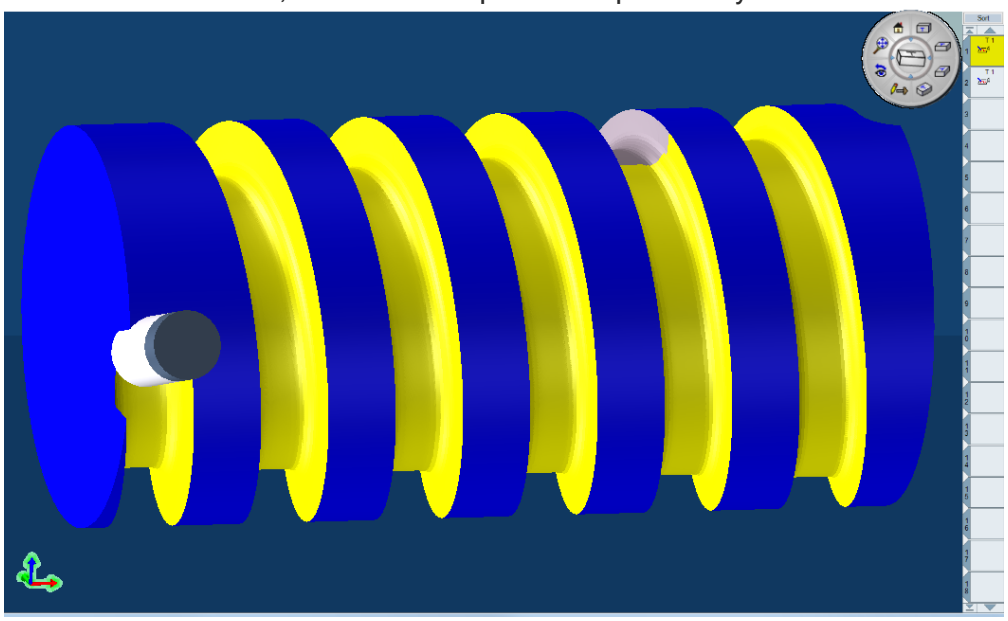

Radial Tool

Selecting this checkbox forces the tool axis to be radial to the centerline of rotation, eliminating Y offsets. The tool's centerline will always go through the center line of the current coordinate system. This is a good solution for machines without Y axes, as Y positions will not be generated. This is similar to toolpath generated by the GibbsCAM Polar & Cylindrical Milling option. The Radial Tool option is frequently used for engraving. To support this, the tool will pivot around the center of a ball end mill, or otherwise the tool tip center for other tool shapes.

Progressive Lean Angle

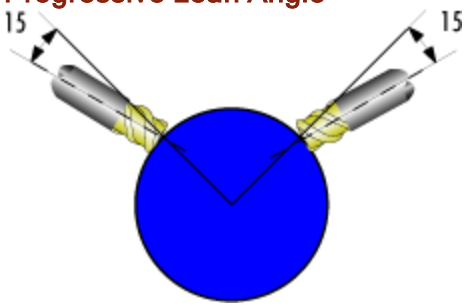

Selecting this checkbox will lean the tool over perpendicular to the geometry in the direction of the cut. The lean will change with the geometry. This option is normally used with a Lean Angle value. It considers geometry direction so that the tool will always lean to the left, for example. It also adjusts the lean from full lean when moving parallel to the rotary axis, to 0 lean when moving perpendicular to the rotary axis. The value entered is a maximum value.

Example

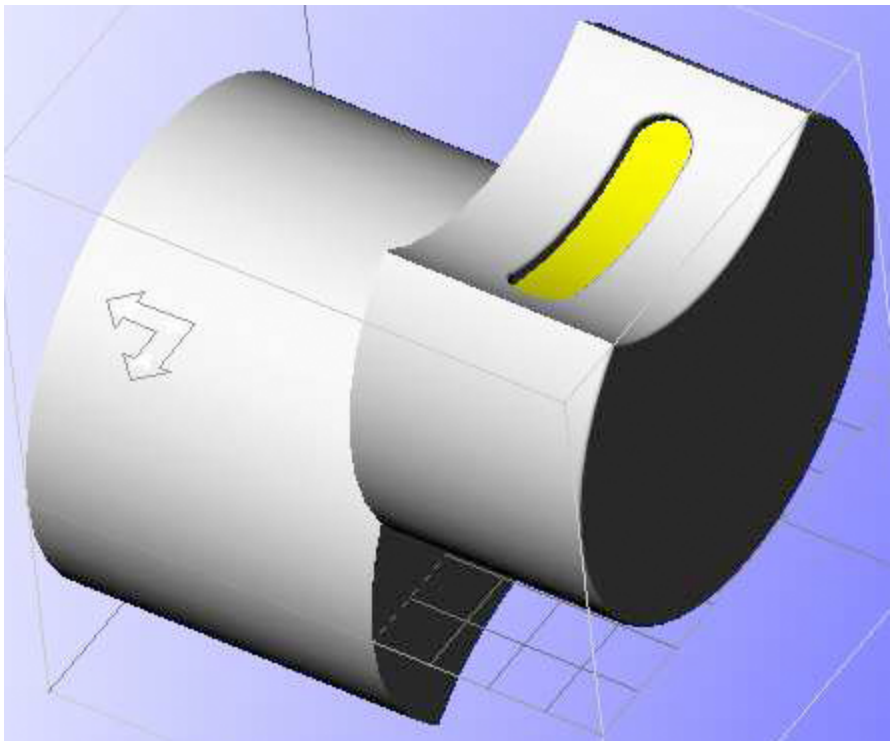

The wall is perpendicular to the top surface (or the bottom surface), but those are not surfaces of revolution centered on the axis of rotation. There is also a fillet running along the top edge that we would machine in 1 pass with a roundover tool.
Parameters for the cut along the pocket wall.

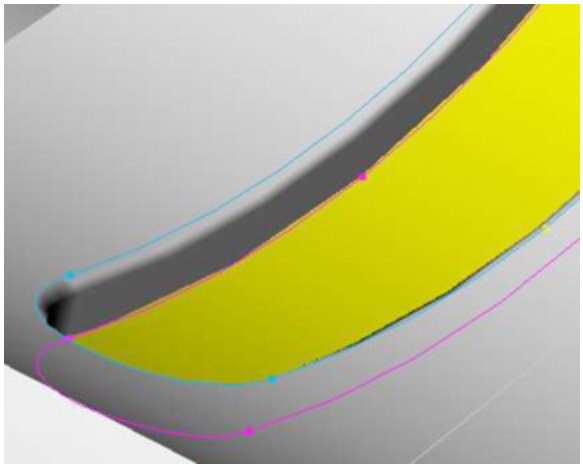

Tool Direction is set to Perp Surface and Perp/Cut Dir is given a negative tool radius value to shift the tool.

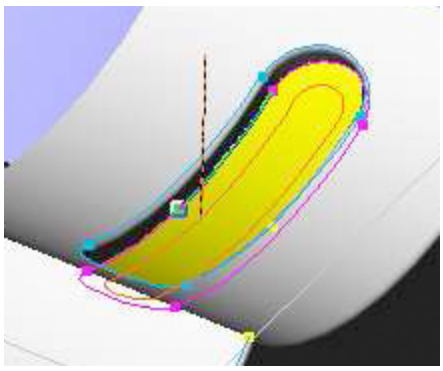

Two things need to be selected, the bottom surface and the shape at the bottom of the pocket.

Parameters for the fillet cut

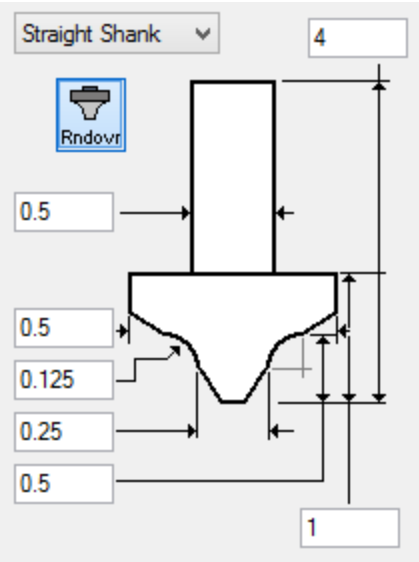

The Depth should be set to a constant offset that corresponds to the inverse of the tools “length from the tip to the top of the radius” (`-0.03`). The Tool Shift Perp/Cut Dir is given a value that corresponds to the pilot radius + the roundover radius (`0.19/2 + 0.03 = -0.125`).

Select the top surface and the shape at the end of the fillet on the top surface.

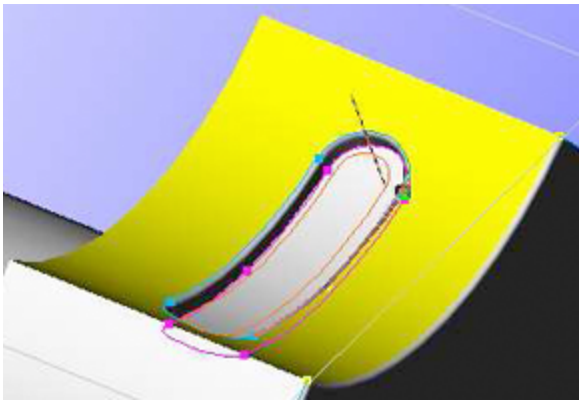

Constraint Surfaces

Constraint surfaces are also known as *check surfaces*. The typical use of this capability is to be able to make a 4-axis contour cut around a pocket wall with a concave bottom (to avoid gouges) or a bottom located at a variable depth.

1. Select the shape you want to follow and the surfaces at the bottom of the pocket as constraint surfaces (they will be shown in red).
2. Enter a tool perp offset value equal to the radius of the tool.

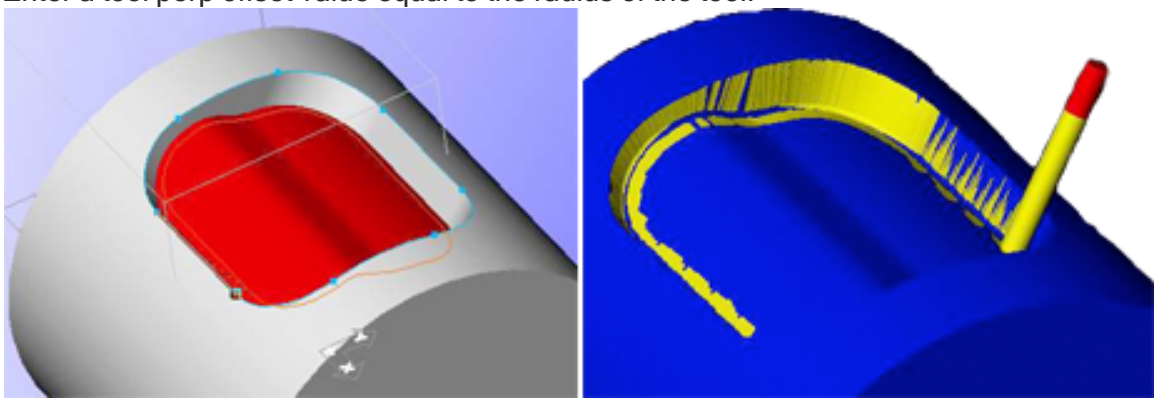

Pocket Containment

Contouring in Radial Milling supports containment surfaces. Select the shape and the surfaces at the bottom of the pocket as constraint surfaces (they will be shown in red).

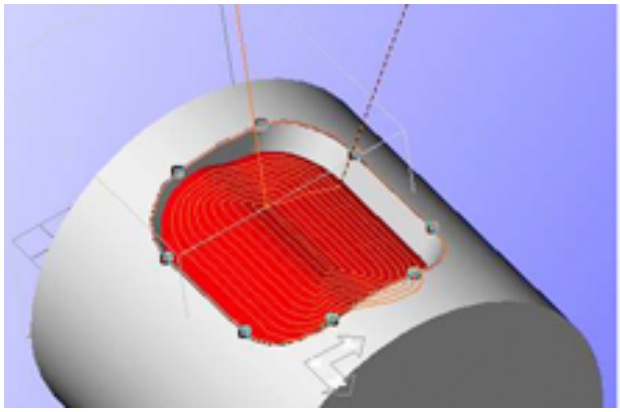

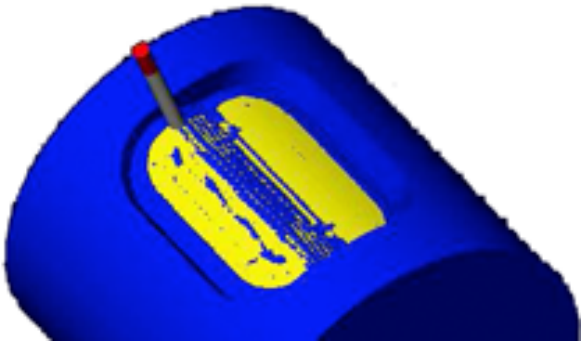

Curve

If geometry was selected before the process was created, the Full Shape field will display the length of the selected shape. The entire length of the selected shape (open or closed) does not have to be machined.

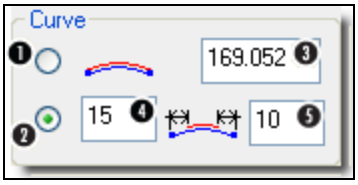

1. Full Shape
2. Within the Shape
3. Shape Length
4. Start Distance
5. End Distance

Full Shape

Selecting the first Curve option will machine the entire selected shape. This is the default selection.

Within the Shape

Selecting this option will allow you to machine only a portion of the selected shape. The text boxes allow you to specify a distance (setbacks) from the start and end of the selected shape that will not be machined. The distance is measured along the shape.

Depth

It is recommended that you examine a part's geometry in the rotary axis normal plane. A common mistake is to forget about geometry's radial depth changes and wonder why the floor is being gouged.

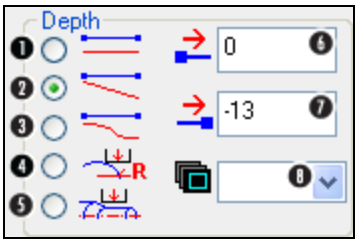

1. Constant
2. Linear Variable
3. Progressive Variable
4. Constant Radius
5. Profile
6. Depth at Start
7. Depth at End
8. Workgroup

Constant Depth
Specify the depth from the shape that the tool will cut. There is only a depth at start value for the constant depth. A positive or negative incremental radial depth shift from the geometry may be entered. The tool will still follow the radial depth of the geometry. A circle or cylinder around the rotary axis has a constant radial depth.

Linear Variable Depth
This option generates toolpath that starts at one depth and ends at another. The depth along the cut shape will vary linearly (uniformly) from the Depth at Start to the Depth at End. This option still follows the geometry radial depth under the shifts.

Progressive Variable Depth
This option generates toolpath that starts at one depth and ends at another. The depth along the cut shape will vary progressively from the Depth at Start to the Depth at End being tangent to a cylinder at the start and end. This option still follows the geometry radial depth under the shifts. This option is important for certain cam types. For this option to work properly the Segmentation values must not be "0".

Constant Radius
This option will ignore the geometry's radial depth, and just cut the shape at a constant cylinder. The top of the tool will vary but the tip of the tool will remain at a constant radius value. This is useful when cutting tapered threads (you want to follow the top of the shape but doing so will gouge the part) or cutting flat geometry on a curved surface.

Profile
This option can control the depth of the tool by with geometry in a workgroup that gets revolved around the rotation axis. This geometry works as a guide that the tool will not violate if the cut geometry is below the profile.

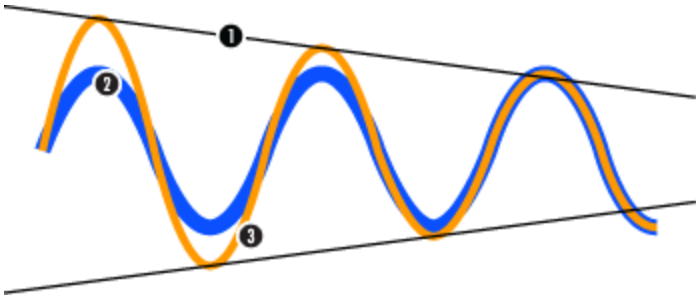

1. Profile Geometry
2. Helical Geometry
3. Toolpath

To use this option, draw a 2D geometry profile shape; it may be open and terminated, or closed (that is, in a workgroup by itself). This geometry will control the Z depth of the tool while cutting another geometry shape in Radial Milling. Be sure to select this workgroup in the workgroup selection menu next to the Profile option. Additionally, you can set an incremental value from the cut geometry in the Depth at Start box. Normally you would cut with the tool at this depth using the R choice. Profile compares this depth (cut shape: Depth at Start) to the profile geometry and uses the profile geometry to calculate the Z if it is higher.

Tool Shift

When cutting a wall, you will frequently have a tool radius value in the Perp/Cut Dir box. Plus values offset to the left, minus values to the right. Even though the tool may move to one side, or up and down under Depth options, its radial alignment will be determined from a radial line through the prime point, at every position on the geometry. This will produce Y offsets in the toolpath and radial surfaces on the part. This is a good choice for many parts.

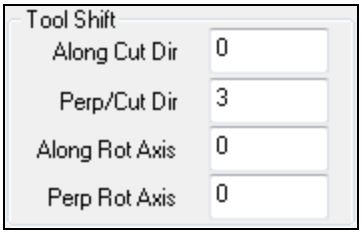

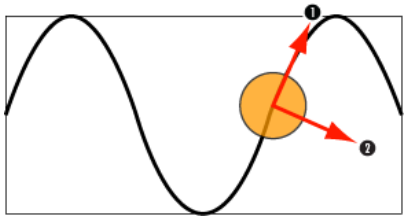

1. Along Cut Direction
2. Perpendicular to Cut Direction

Along Cut Direction

This option modifies the position of the tool contact point on the selected shape along the cut direction. This parameter is useful when cutting floors, not walls. Typically this value is equal to the tool radius. In the following image we can see how a tool is shifted along a shape so that the material is being cut with the side of the tool rather than the bottom of the tool.

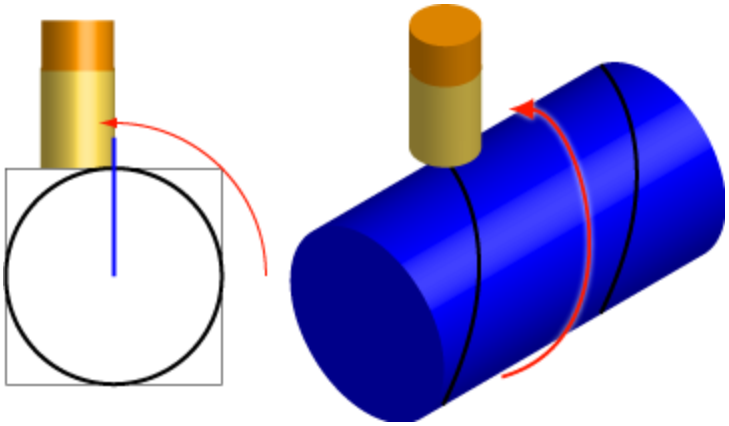

The example below shows the difference between a negative value (#1) and a positive value (#2) offset. If the toolpath were going in the opposite direction, the results would be the opposite, with a negative value outside the shape and a positive value inside the shape.

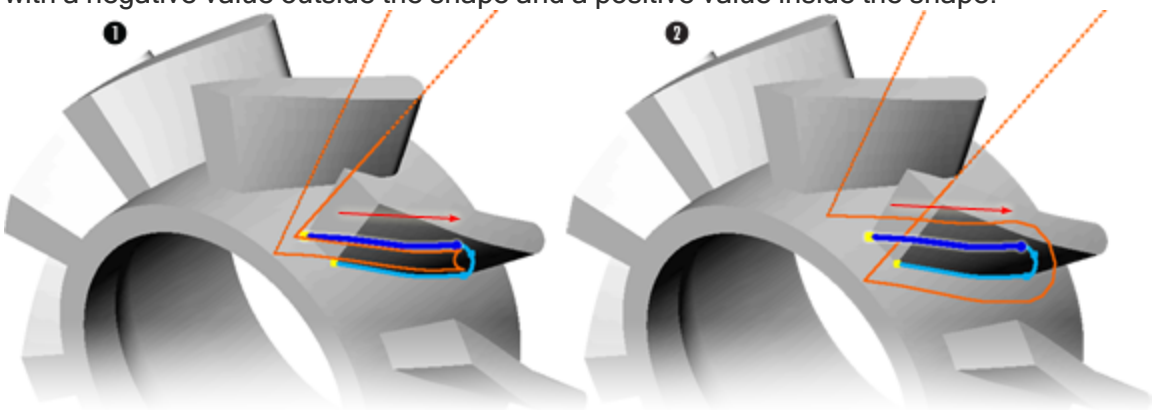

Perpendicular to Cut Direction

This option modifies the position of the tool contact point on the selected shape perpendicular to the tool axis and the cut direction. This parameter is useful when cutting walls. Typically this value is equal to the tool radius. The example shows the difference between a positive value (#1) and a negative value (#2) offset.

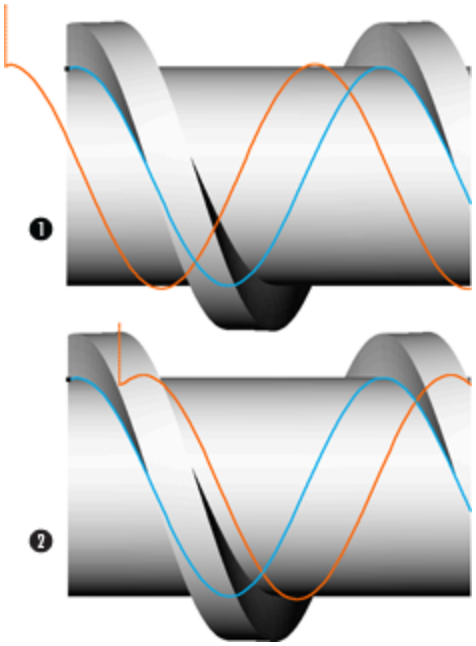

In this situation the negative value is violating the part. If the toolpath were going in the opposite direction, the results would be the opposite.

Segmentation

Max Length

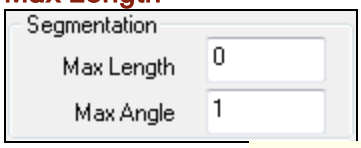

The Segmentation Max Length value is another term for the toolpath's chord height setting. Specify the maximum distance between 2 consecutive toolpath points along the contour. This value can be used to force the program to compute additional points on near flat surfaces to get a smoother toolpath without having to lower the machining tolerance. Setting this value to 0 turns the feature off. This can lead to a long, straight line between 2 points.

Max Angle

Specify the maximum angle between the surface normals of two consecutive toolpath points along the contour. This value can be used to force the program to compute additional points on surfaces with high local curvatures to get a smoother toolpath without having to lower the machining tolerance. Setting this value to 0 turns the feature off. Doing so allows the system to set the tool to any angle deemed appropriate. Entering an actual angle forces the tool to remain within that angle of any selected geometry or faces.

Gouging with Radial Milling

Gouging is an undesirable thing to do, and the common result of incorrect use of Radial Milling. Contour cuts from geometry, and provides significant flexibility in controlling cutting motion and resulting part shapes. It does not distinguish between cutting floors, walls, or walls and floors. It is not cutting directly from a solid, and has no knowledge of solid faces to avoid gouging. It does not have a solid machining capability like SolidSurfacer and 2.5D Solids. Although the Radial

Milling module can do a fine job machining geometry from solids, it does not do so directly and automatically. Since it is driven by geometry, the user is responsible for avoiding undesirable side effects of the tool geometry and tool motion specified, just as in 2D or 3D programming from geometry.

A Conical Floor

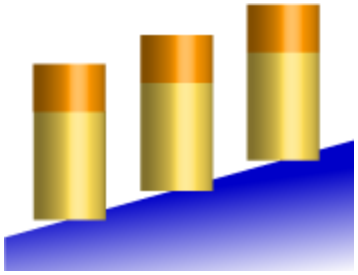

The most common floor is a cylinder. Another is a cone. A cone means that the floor's radial depth increases linearly along the axis of rotation. Radial Milling Contour does not have a floor face capability. The tool follows geometry. The cross section of a cone is a circle in the rotary axis normal plane. If you program a tool to cut this circle, you will gouge the cone. Radial Milling places the tool tip on the geometry. Even a ball end mill will gouge, because the tip at geometry depth is not the tool tangent point with the cone. A flat tool will gouge significantly on the uphill side and will leave material on the downhill side. On some parts this is acceptable. Other parts, however, might require cutting a precise conical floor. In this case you will want to adjust your toolpath to not gouge. For a constant angle cone, there is a single depth adjustment value that will raise the tool to not gouge. You can draw the geometry and calculate this adjustment, or you can set the finish solid to act as the Stock Body, Zoom up on the part in CPR (or Flash CPR), and try different values until it looks good. You should be able to get within .005 inches (0.1mm) in just a few attempts.

Normal Plane Gouging

It is important to understand what a part's geometry looks like in the rotary axis normal plane, as an example, that being the YZ for the X-Axis. Parts with cylindrical floors look like circles. Shapes that change radial depth will not look like circles.

Lean/Tilt Gouging

Since tools tilt away from the radial angle at their geometry point, and if the tool tip is at the geometry point in depth, it will lean/tilt about its tip. (Radial Tool alignment is different, as noted above.) Even if cutting a circle in this view, tilting a ball end mill around its tip will gouge the circle.

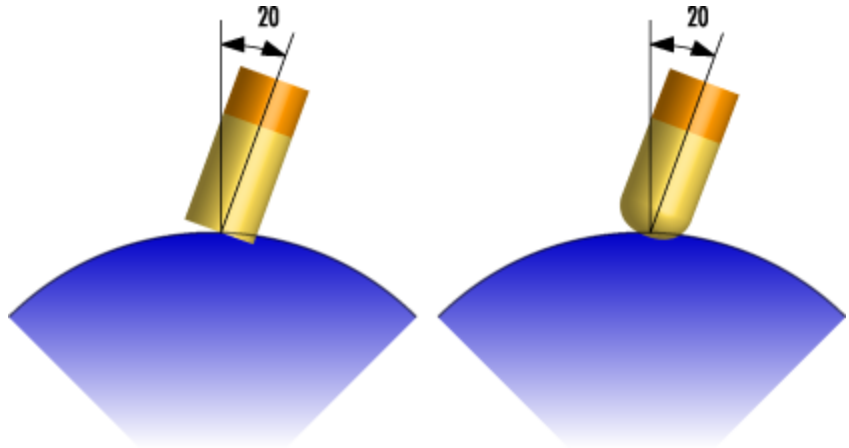

Flat Endmill Gouging Ball Endmill Gouging

If you are not cutting a floor, this is not a problem. If you do have a floor, you need to stop gouging. You can change your Depth option to Constant Radial Depth. This prevents gouging for a cylinder by adjusting the tool's depth automatically. But if your floor is not a cylinder, you will have to adjust the depth yourself, either by calculating the necessary adjustment, or eyeballing the necessary adjustment. This is described above, in A Conical Floor.

Geometry-Based Gouges

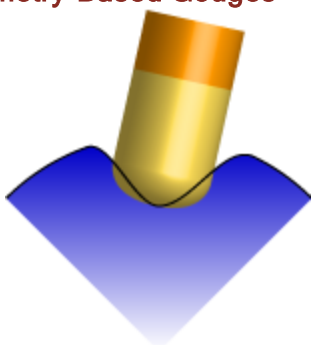

A flat tool following geometry will not gouge a circle. However, because the tool keeps its center on the geometry, it will gouge any concave corner in this plane. So will a ball end mill. The exception to this “always gouging” is when you are primarily cutting a floor, and use the Tool Direction from Geometry option, which keeps the tool normal to the geometry in this normal plane. Now a ball endmill will not gouge an inside fillet larger than the tool radius, but it will gouge a concave fillet smaller than the tool radius, or an inside sharp corner. None of this matters if you are not cutting a floor, but it does matter if you are.

Tangent plane gouging

Visualizing your geometry as the tangent plane moves around the part allows you to think about it as if it were unwrapped and laid flat, like a 2D shape. If there is no Perpendicular to Cut Direction value, there will be no geometric gouging, as the tool is on center. When you use a Perpendicular to Cut Direction value to offset the tool, your geometry must have radiuses, in the tangent plane, on the inside corners, larger than the Perp Cut/Dir value.

Depth gouging

Your tool follows the geometry depth in three of the four depth options. If you have a floor that does not also follow the same depth changes, you will gouge the floor.

Radial Pocketing

In the Radial Milling module, pocketing supports radial walls and cylindrical floors only. The Radial Pocket process requires a closed loop of geometry as its selection. This geometry should lie on a cylinder. Alternatively, you can select a cylindrical face as the pocket floor. Radial Pocket will expand the tool out to the centerline of the face edge, or the centerline of the geometry. You can use Stock to achieve a tool radius offset, if necessary. Radial Pocket does not require that geometry have radiuses on corners. It produces radial walls if you specify a tool radius value for Stock.
The Radial Pocket Parameters dialog allows you to set the parameters for clearing out a Radial Milling pocket. Click the Close button to close the dialog and save your process parameters. Select the shape you wish to cut and click Do It in the Machining palette to create the operation.

Approach/Retract

The Approach/Retract values are basically the same as any GibbsCAM process with the addition of some data. All values entered here are in part units. For an example of these values and how they are output, see "Illustrated Example of the Clearance Planes" on page 16.

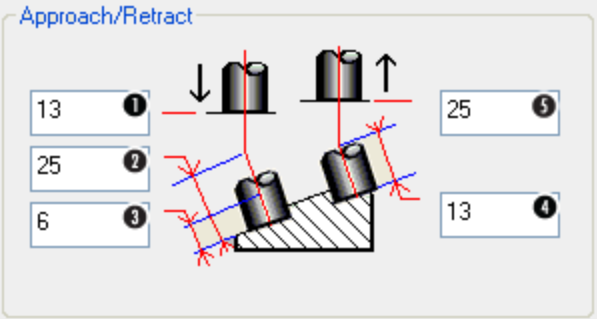

1. Entry Clearance Plane
2. Rapid Clearance
3. Feed Entry Clearance
4. Feed Exit Clearance
5. Exit Clearance Plane

Entry Clearance Plane:
This value is not used by GibbsCAM.
Rapid Clearance:
This value is an incremental distance measured up from the finish cut depth. The resulting Z-axis rapid approach move will always occur after the rotary axis has rotated to the correct starting angle. The rotary axis angle will be identical to the tool orientation at the first point of toolpath. The Z-axis approach move also occurs before any lead-in moves. This item is similar to a Mill Contour or Pocketing Clearance Plane 2. This clearance value could be considered CP2a.
Feed Entry Clearance:
This value is an incremental distance measured up from the finish cut depth. The tool will rapid from the Rapid Clearance Z to the Z and will then feed to the cut depth. The rotary axis angle will be identical to the tool orientation at the first point of toolpath. The move occurs before the Lead-in move. This item is similar to a Mill Contour or Pocketing Clearance Plane 2. This clearance value could be considered CP2b.
Feed Exit Clearance:
This value is an incremental distance measured up from the finish cut depth. The rotary axis angle will be identical to the tool orientation at the last point of toolpath. This move occurs after

the Lead-out move. This item is similar to a Mill Contour or Pocketing Clearance Plane 3. This clearance value could be considered CP3b.

Exit Clearance Plane:

This value specifies the clearance plane for the operation. This value is an absolute Z-value in the current CS (the machining CS). This item is similar to a Mill Contour or Pocketing Clearance Plane 3. This clearance value could be considered CP3a.

Spindle Feed

Spindle RPM

Specify the rotation speed of the spindle in revolutions per minute.

Feedrate

Specify the cutting feedrate in millimeters per minute or inches per minute. For Inverse Time, simply enter the desired unit per minute feedrate. The post (if it supports inverse time) will convert the value. For example: If the desired feedrate is 50 inches per minute, then enter `50` in the dialog, and the post will convert “50” to the inverse time equivalent.

Plunge Feed

Specify the feedrate when plunging in millimeters per minute or inches per minute

Coolant Checkbox

If you wish to use coolant in this operation select this option and select the type of coolant to use.

Cutting

StepOver

Specify the distance the tool will move over while pocketing. This should be less than or equal to the tool radius.

Stock

Specify the thickness of material to be left on the pocket. This value is in part units.

Tolerance

This option allows you to set the accuracy of the toolpath along the selected geometry. This value is in part units.

Depth

Specifies the depth above or below the selected geometry or solid face.

Reverse Tool Direction

This option generates identical toolpath but cuts in the opposite direction. It is difficult for the system to predetermine whether the cut direction will be climb or conventional. If the results are not what you want simply select this option and the toolpath will go in the opposite direction.

Roughing

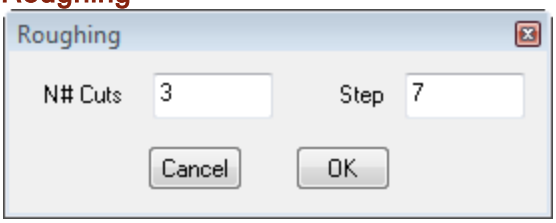

This option allows you to define the number of cuts (using `N# Cuts`) down the toolpath will make to the final depth and the size of the `Step` to take.

Toolpath

4th Axis

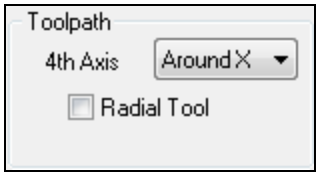

This option is to define the 4th axis. The tool orientation is defined by a radial direction at the contact point on the selected shape. The rotary axis is defined by the selected axis. Options include `Around X` (or `Y`, or `Z`) of CS1, and `Around H` (or `V`, or `D`) of the current CS.

Radial Tool

This option forces the tool axis to be radial.

Segmentation

Max Length

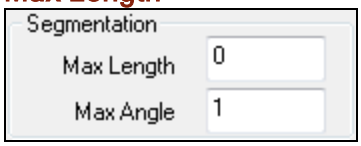

Specify the maximum distance between two consecutive toolpath points along the shape. This value can be used to force the program to compute additional points on near flat surfaces to get a smoother toolpath without having to lower the machining tolerance. Setting this value to `0` turns the feature off.

Max Angle

Specify the maximum angle between the surface normals of 2 consecutive toolpath points along the shape. This value can be used to force the program to compute additional points on surfaces with high local curvatures to get a smoother toolpath without having to lower the machining tolerance. Setting this value to `0` turns the feature off.

Custom Lead In/Out

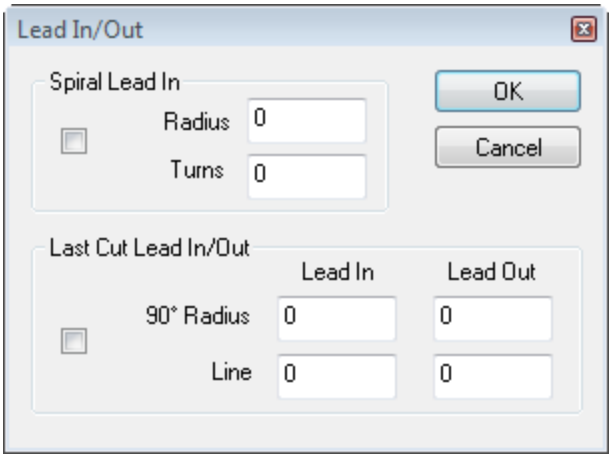

Select the Custom Lead In/Out checkbox to enable an entry and/or exit move that is not a straight line. Click the Lead In/Out button to define the moves. Click the OK button to save your changes or the Cancel button to close the dialog without saving your changes.

Spiral Lead In

Select this option to make the tool spiral down into the pocket. You can define the size of the spiral (the Radius value) and how many times the tool will spiral (the Turns value) to the final depth. If a value of 0 is entered, the feature will not be output.

Last Cut Lead In/Out

Select this option to define a Line and/or 90° Radius move on the entry (Lead In) and exit (Lead Out) motion on the last pass of a pocket. If a value of 0 is entered, the feature will not be output.

Appendix

- "Calculating Rotary Angles" on page 36
- Glossary

Helpful Formulas

Calculating Rotary Angles

The two formulas below are for determining an unknown angle or an unknown distance when working with wrapped and unwrapped geometry.

- If you have a known angle and need to determine what length it will be when unwrapped, use the following formula.

  `Length = (Angle × π × Radius) / 180`

  For example, we have a 2.5 inch cylinder and the angle is 60°, we can calculate the length of the line to be 2.618 inches.

  `(60 × 3.1416 × 2.5) / 180 = 2.618`

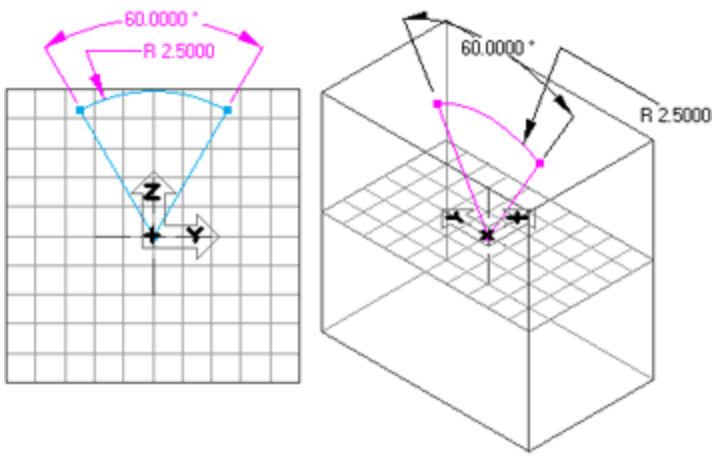

- If you have a known length and need to determine what angle it will be when wrapped, use the following formula.

  `Angle = (Length × 180) / (π × Radius)`

  For example, we have a line that is 2.618 inches long that is going to be wrapped around a 2.5 inch cylinder, we can calculate the angle to be 60°.

(2.618 × 180) / (3.1416 × 2.5) = 60

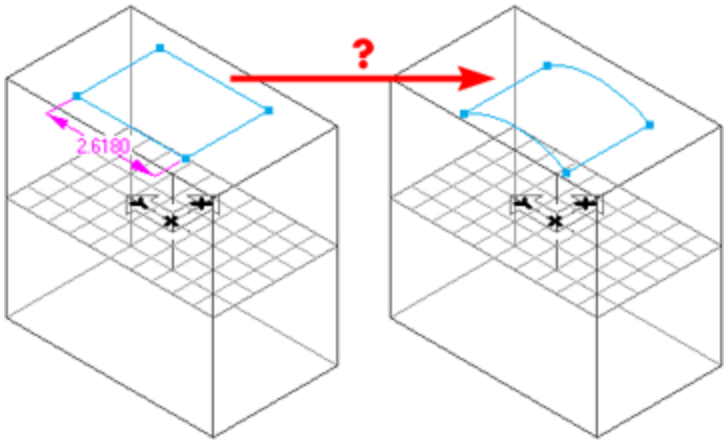

Glossary

Radial Milling introduces a number of new concepts to the GibbsCAM product line. While some of these concepts may be known to you, it is recommended that you read through the definitions to ensure you understand how they are used with Radial Milling. *Italicized* items are defined within the glossary.

4-axis Surface	A surface that can be cut “well enough” with a 4-axis machine.
Radial Milling	The module for machining 4-axis radially prismatic parts. Formerly known as the "4-Axis" module.
5as	The ProAXYZ module for machining 5-axis freeform parts.
Developable Surface	A developable surface is a surface that can be cut exactly with the side of a tool (a cutting cylindrical shape). Developable surfaces have parallel surface normal vectors along a surface line (not curve) of tool cylinder contact. Prismatic surfaces are developable surfaces. Most *radial surfaces*, *ruled surfaces*, and *swept surfaces* are not developable surfaces. The safe way to cut non-developable surfaces is by using 3-axis or freeform rotary methods which are slow and expensive.
Freeform	Freeform refers to a solid of any shape. Rotary machining on a freeform shape is performed with many passes, cutting with the tool's tangent point of contact.
Part-centric	The way GibbsCAM looks at parts. This means we think and talk about the part as if it is stationary and tools move around it. We do not think about machine motion. We think of cutting the way it is shown in CPR, so we say the tool is moving around the part, even though on a rotary table machine the part would be rotating.
Prismatic Shape	A prismatic shape (surface or solid) is a 2D profile extruded along a depth axis, e.g., the shape can be 2D in XY, and extruded in Z. A 2-axis mill part

	is a combination of prismatic shapes.
Radial	Radial refers to anything defined in relation to an axis of rotation.
Radial depth	The radial depth is the distance from the axis of rotation.
Radial line	A radial line is a line that passes through and is perpendicular to an axis of rotation.
Radial Shape or Radial Profile	A radial shape is a shape which lies on a cylinder around the axis of rotation. This is the radial equivalent to a 2D shape or profile.
Radial surface	A radial surface is a swept surface where the profile is a *radial line*. Typically the radial line sweeps around a radial shape). A radial surface is also any *ruled surface* where all the rule lines are *radial lines*.
Radially Prismatic	The *radial* equivalent to a *prismatic shape*.
Polar & Cylindrical Milling	The GibbsCAM product option for 4-axis milling of wrapped geometry. Formerly known as Rotary Milling.
Ruled Surface or Ruled Solid	A surface that is created by moving a line around a closed shape while keeping the other end of the line on a second shape. A ruled shape is a *prismatic shape* if the 2 HV shapes are identical, only offset in D. This causes the ruling line to always be parallel to D.
Swept Surface or Swept Solid	A 3D shape that is created if a profile is moved around a closed shape. If the profile is a line, the 3D shape is equivalent to a *ruled surface*. If the closed shape is 2D in XY and the line is parallel to Z, then a *prismatic shape* is created.

Conventions

GibbsCAM documentation uses two special fonts to represent `screen text` and `keystrokes or mouse actions`. Other conventions in text and graphics are used to allow quick skimming, to suppress irrelevancy, or to indicate links.

Text

`Screen text`. Text with `this appearance` indicates text that appears in GibbsCAM or on your monitor. Typically this is a button or text for a dialog.
`Keystroke/Mouse`. Text with `this appearance` indicates a keystroke or mouse action, such as `Ctrl+C` or `right-click`.
`Code`. Text with `this appearance` indicates computer code, such as lines in a macro or a block of G-code.

Graphics

Some graphics are altered so as to de-emphasize irrelevant information. A “torn” edge signifies an intentional omission. Portions of a graphic might be blurred or dimmed to highlight the item being discussed. For example:

Annotations on a graphic are usually numbered callouts (as seen above), and sometimes include green circles, arrows, or tie-lines to focus attention on a particular portion of the graphic.

Links to Online Resources

Please contact your reseller for support.

Link	URL	Action / Description
Go	http://www.GibbsCAM.com	Opens the main website for GibbsCAM.
Go	https://online.gibbscam.com	Opens Gibbs Online page to download GibbsCAM and all supported material.

Index

#

4-Axis
defined and compared to Radial Milling 9

4-Axis product module
former name of "Radial Milling" 8

4-axis Surface 8
defined 37

4th Axis Selection 21, 34

A

Along Cut Direction, Tool Shift 28

Analytical Helical Toolpath 22

Approach 18

C

Center Approach 18

Constant Depth 27

Constant Radius 27

Coolant Checkbox 16, 33

Custom Lead In/Out, Pocketing 35

D

Depth 33

Depth options 26

Developable Surface 7
defined 37

E

Entry Clearance Plane 16, 32

Exit Clearance Plane 16, 33

F

Feed Entry Clearance 16, 32

Feed Exit Clearance 16, 32

Feedrate 15, 33

Freeform 7
defined 37

From Geometry 21

Full retract 19

Full Shape, Curve option 26

H

Height retract 20

I

ID machining 10

L

Last Cut Lead In/Out 35

Lead In/Out button 35

Lean Angle 15

Left side approach 19

Linear Variable Depth 27

M

Max Angle, Segmentation 29, 34

Max Length, Segmentation 29, 34

N

Number of Cuts, Roughing option 20

P

Part-centric 8
defined 37

Perp/Cut Dir 14

Perpendicular to Cut Direction, Tool Shift 28

Plunge Feed 33

Plunge, Roughing entry option 19

Polar & Cylindrical Milling 8
defined 38

Prismatic Shape 6
defined 37

ProAXYZ 5as 8
defined 37

Profile, depth control 27

Progressive Lean Angle 23

Progressive Variable Depth 27

R

Radial 6
defined 38

Radial Contouring
unsegmented helical toolpath 22

Radial depth 6
defined 38

Radial line 6

Radial Milling 8
defined 37

Radial Shape
defined 38

Radial Shape or Radial Profile 6

Radial surface 6
defined 38

Radial Tool 22, 34

Radial Wall 21

Radially Prismatic 7, 9
defined 38

Ramp Entry 18

Ramp, plunge entry 19

Rapid Clearance 16, 32

Retract full 19

Retract height 20

Retract, Roughing option 19

Reverse Tool Direction 33

Right side approach 19

Rotary Milling product option
former name of "Polar & Cylindrical Milling" 8

Roughing 33

Roughing, Lead In/Out option 19

Ruled Surface
defined 38

Ruled Surface or Ruled Solid 6

S

Side Cut 21

Side Walls 21

Spindle RPM 15, 33

Spiral Lead In 35

Split Ops 20

Split Ops, Roughing option 20

Step, Roughing option 20

StepOver 33

Stock 15, 33

Straight, plunge entry 19

Swept Surface
defined 38

Swept Surface or Swept Solid 6

T

Tangent Entry/Exit 18

Tolerance 15, 33

Tool Dir From Geometry 21

Tool Shift 27

Transitional Element 8-9

U

Unsegmented Helical Toolpath 22

W

Within the Shape, Curve option 26

Z

Zig Zag, Roughing option 20